THIS DRAWING IS UNPUBLISHED. RELEASED FOR PUBLICATION -,- .
© COPYRIGHT - BY TYCO ELECTRONICS CORPORATION. ALL INTERNATIONAL RIGHTS RESERVED.

LOC	DIST
GP	00

REVISIONS

P	LTR	DESCRIPTION	DATE	DWN	APVD
	D	REVISED PER ECO-08-004952	9JUN2008	ZMR	SLB

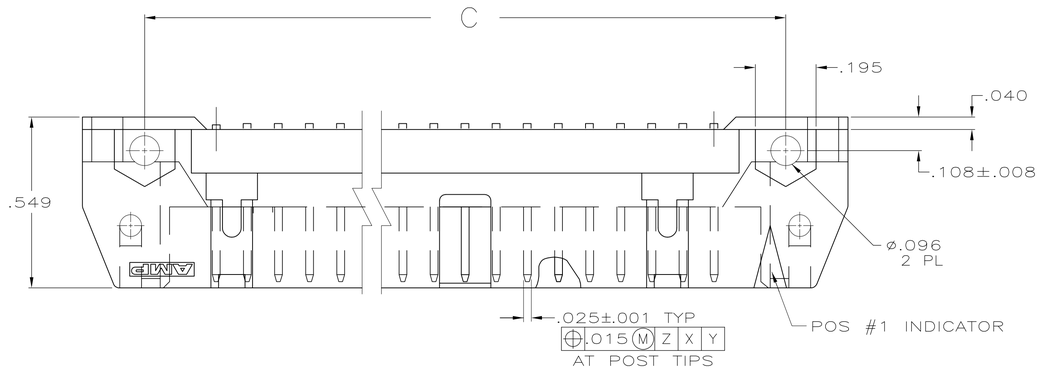

1. NO SNAP-IN POLARIZING FEATURE ON THIS END FOR 10 & 14 POS HEADERS.
2. POSTS: GOLD FLASH OVER PALLADIUM-NICKEL PLATE, .000030 MIN TOTAL ON THE LOCALIZED PLATE AREA, .000100 MIN TIN PLATE ON THE SOLDER-TAIL, .000050 MIN NICKEL UNDERPLATE ON THE ENTIRE POST.
   -OR-
   .000030 MIN GOLD PLATE ON THE LOCALIZED PLATE AREA, .000100 MIN TIN PLATE ON THE SOLDER-TAIL, .000050 MIN NICKEL UNDERPLATE ON THE ENTIRE POST.
3. RECOMMENDED STENCIL THICKNESS EQUALS .010
4. FOR 10 POS.HEADER ONLY, ONE SLOT LOCATED AS SHOWN.
5. MAXIMUM DISTANCE FROM EDGE OF PC BOARD FOR DAISY CHAIN APPLICATIONS
6. MOLDED PARTS: FLAME RETARDANT PCT, UL94V-0 RATED, COLOR RED.
   POSTS: BRASS

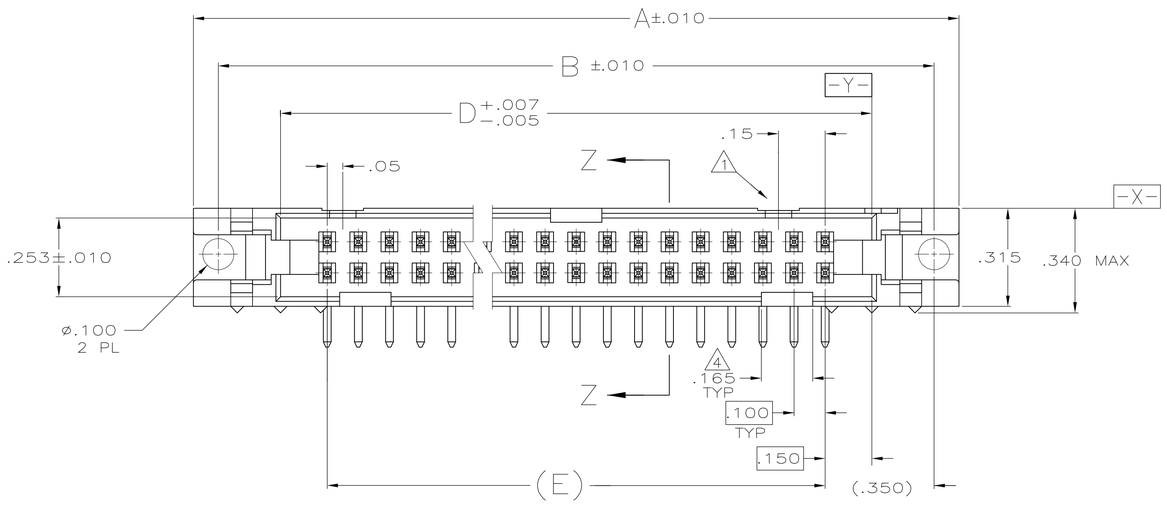

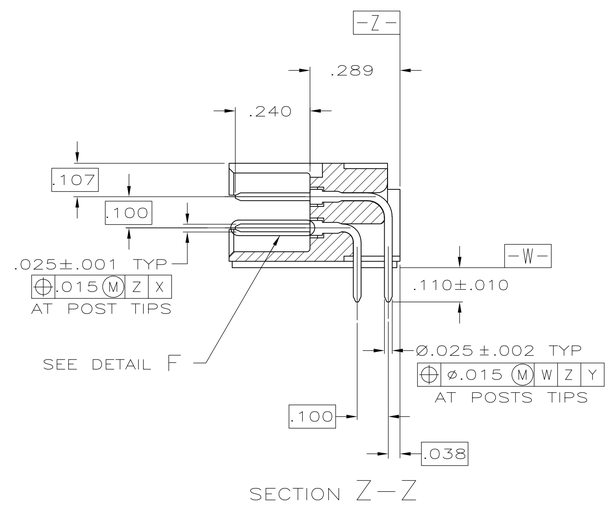

SECTION Z-Z

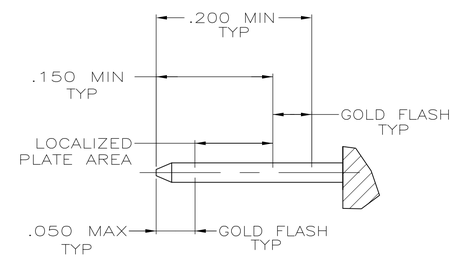

DETAIL F
SCALE 10:1

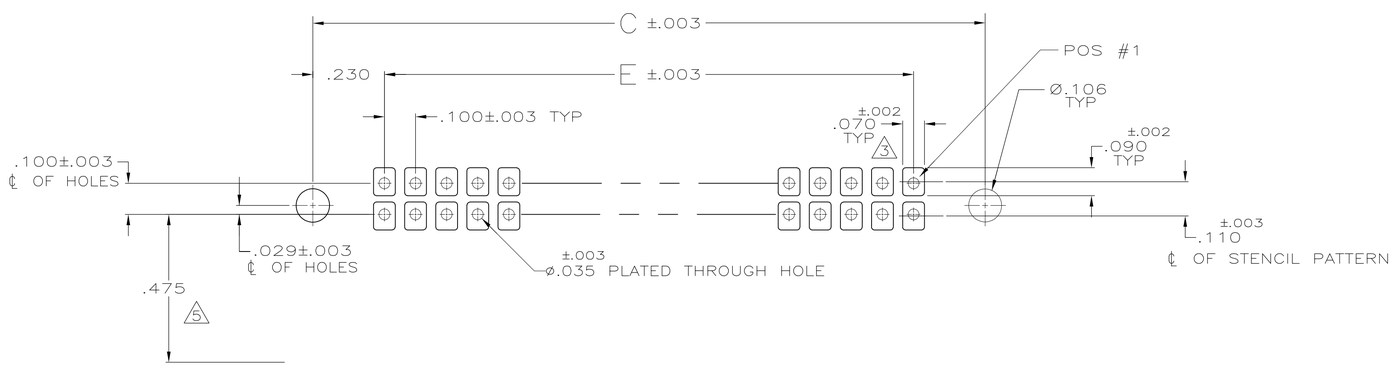

RECOMMENDED
P C BOARD MOUNTING DIMENSIONS

	E	D	C	B	A	NO OF POSN	PART NO
	3.100	3.400	3.560	3.80	3.96	64	1-5111105-2
	2.900	3.200	3.360	3.60	3.76	60	1-5111105-1
	2.400	2.700	2.860	3.10	3.26	50	1-5111105-0
	1.900	2.200	2.360	2.60	2.76	40	5111105-9
	1.600	1.900	2.060	2.30	2.46	34	5111105-8
	1.400	1.700	1.860	2.10	2.26	30	5111105-7
	1.200	1.500	1.660	1.90	2.06	26	5111105-6
	1.100	1.400	1.560	1.80	1.96	24	5111105-5
	.900	1.200	1.360	1.60	1.76	20	5111105-4
	.700	1.000	1.160	1.40	1.56	16	5111105-3
	.600	.900	1.060	1.30	1.46	14	5111105-2
OBSOLETE	.400	.700	.860	1.10	1.26	10	5111105-1

THIS DRAWING IS A CONTROLLED DOCUMENT.

DIMENSIONS: INCHES

TOLERANCES UNLESS OTHERWISE SPECIFIED:
0 PLC ± -
1 PLC ± -
2 PLC ± -
3 PLC ± -
4 PLC ± -
ANGLES ± -

MATERIAL 6
FINISH 2

DWN G. ATTADIA - DOCK5 01-07-05
CHK S. BOLASH 01-07-05
APVD M. WALMSLEY 01-07-05
PRODUCT SPEC 108-40018
APPLICATION SPEC —
WEIGHT —

Tyco Electronics
Tyco Electronics Corporation
Harrisburg, PA 17105-3608

NAME
AMP-LATCH UNIVERSAL HEADER , .025 SQ POST, .100 X .100 CL RIGHT ANGLE. FOR VAPOR-PHASE APPLICATIONS

SIZE	CAGE CODE	DRAWING NO	RESTRICTED TO
A1	00779	C-5111105	—

CUSTOMER DRAWING
SCALE 4:1 SHEET 1 OF 1 REV D

4805 (1/08)